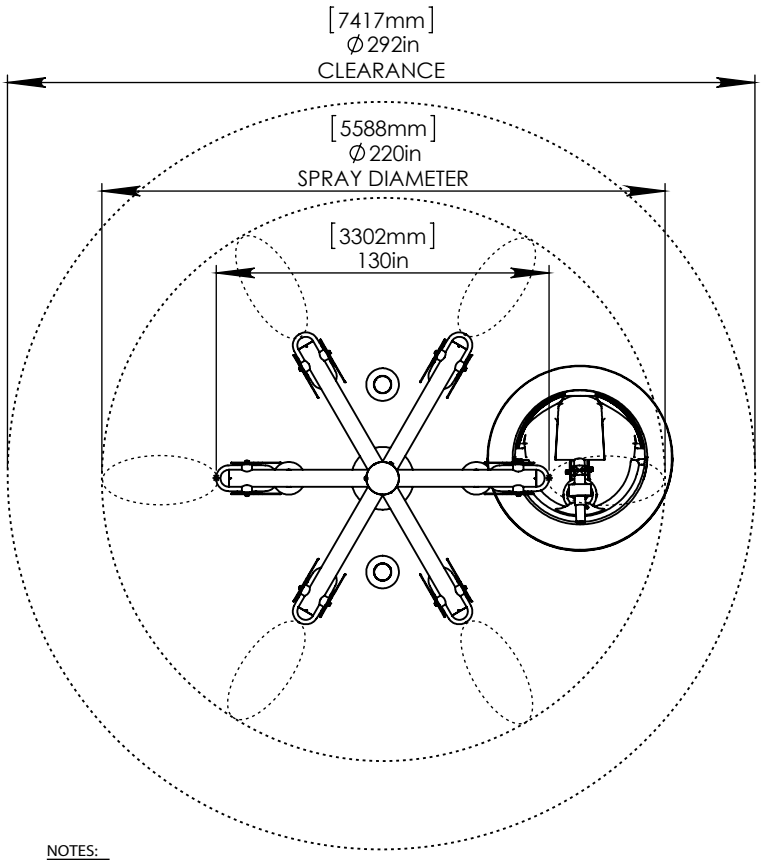

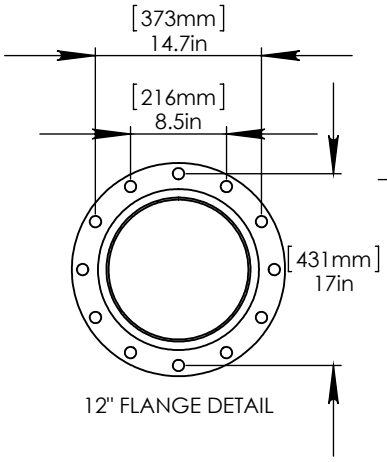

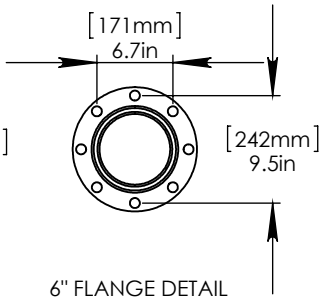

NOTES:

(1) PURGE ALL WATER SUPPLY LINES TO REMOVE SOLIDS PRIOR TO TOY INSTALLATION.

(2) PROVIDE ELECTRICAL BOND WITH POOL REBAR.

(3) INSTALL ALL WATER TOYS PLUMB AND LEVEL.

(4) PROVIDE STRAINER UPSTREAM OF TOY WITH MAX 1#32" (0.8mm) PERFORATIONS.

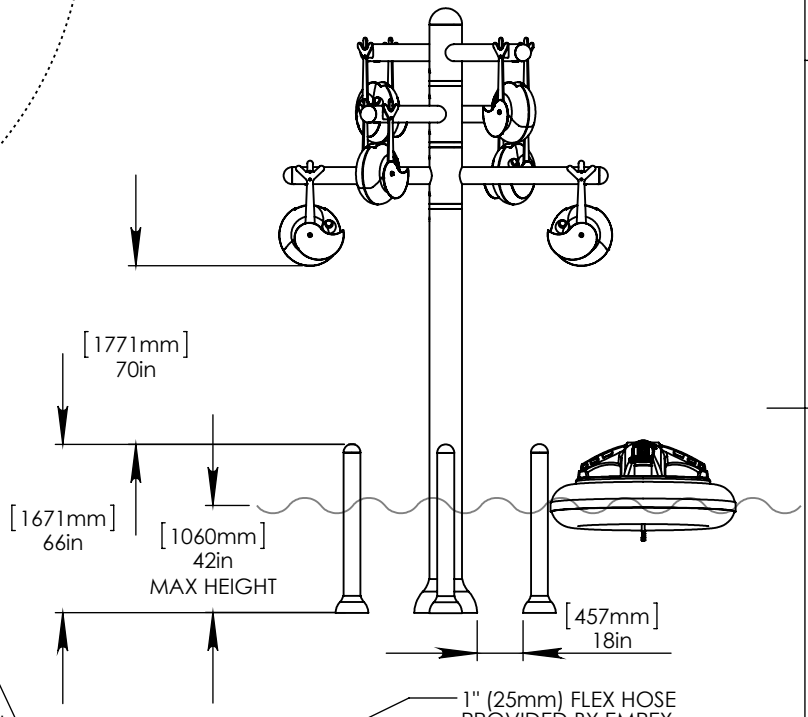

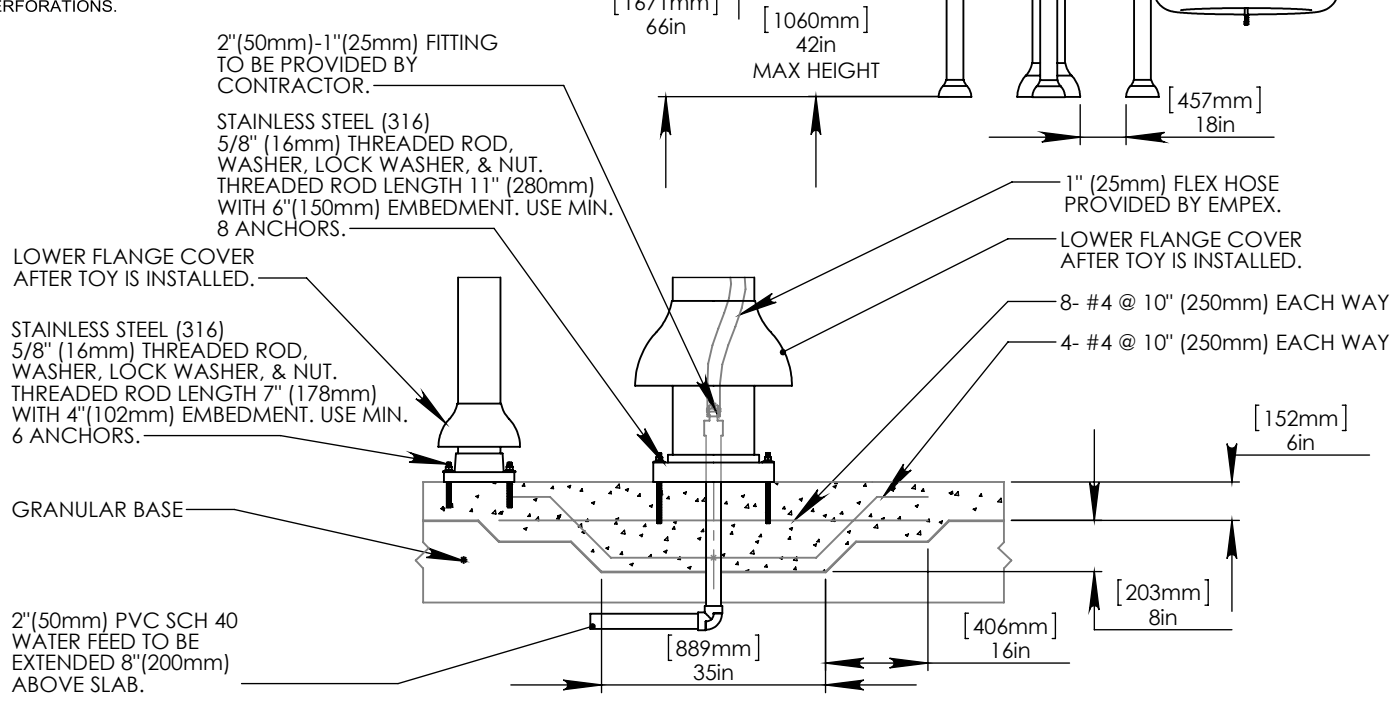

Notes: Overall dimensions of toys are approximate.

© EMPEX WATERTOYS

WATER SUPPLY

50 gpm @ 25 psi
3.15 L/S @17.5m

BUMPER BOAT AQUATIPS

T920	1/22/2015	SCALE: 1:75	Sheet 1 of 1